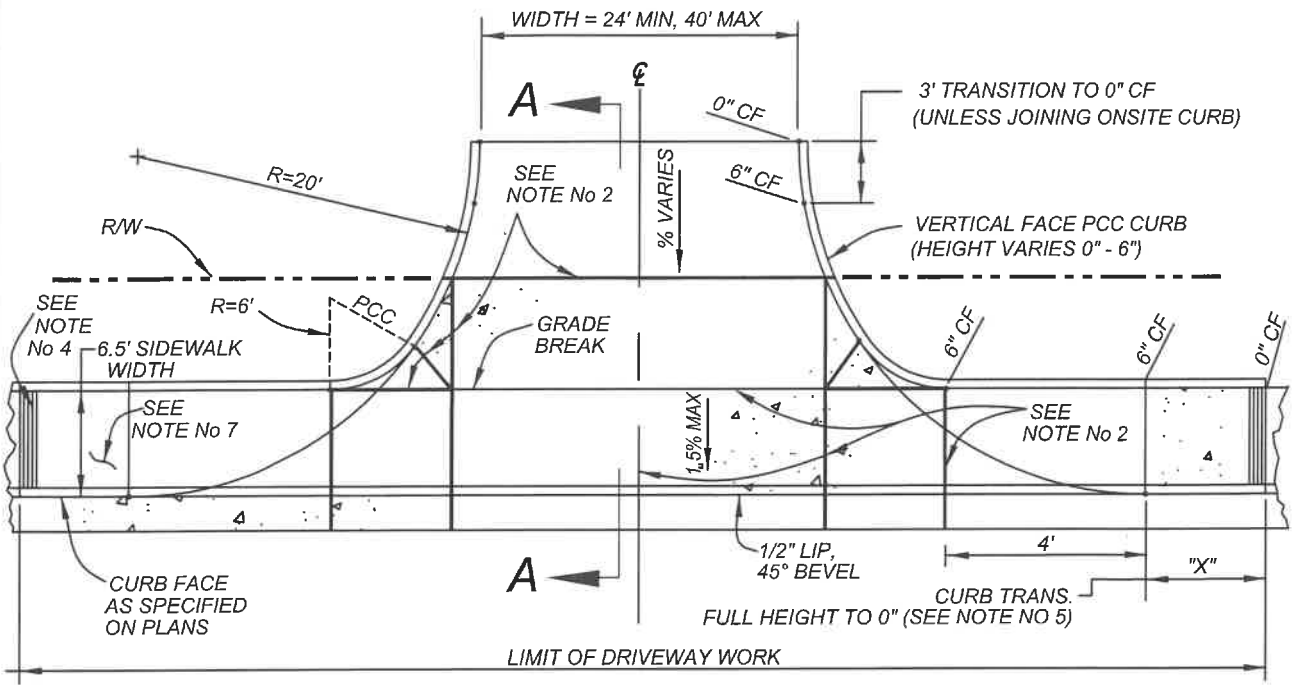

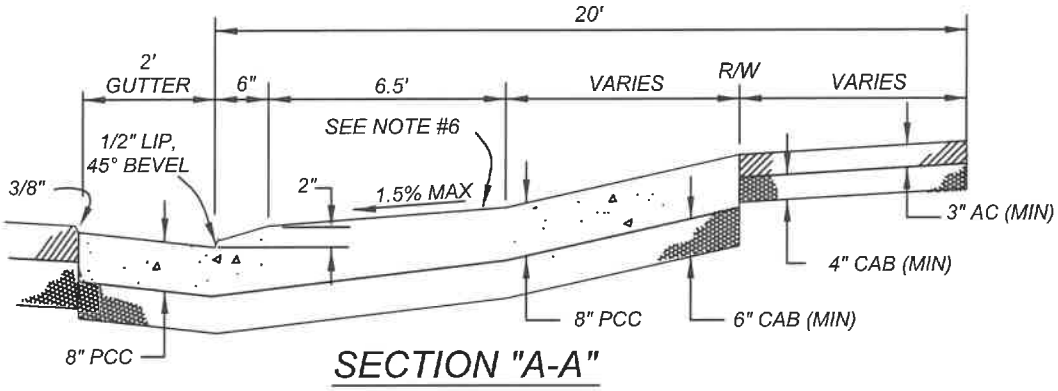

SECTION "A-A"

NOTES:

1.) TYPE II APPROACH SHALL BE USED INSTEAD OF TYPE III OR TYPE IV APPROACH FOR SITES REQUIRING SMALL SEMITRAILER (AASHTO DESIGN VEHICLE WB-40) ACCESS.
2.) WEAKENED PLANE JOINTS ARE REQUIRED AT CENTERLINE OF APPROACH AND AT LOCATIONS AS SHOWN, SPACED 10' MAX AND AS NECESSARY.
3.) CONCRETE SHALL BE CLASS 560-C-3250, CURED WITH WHITE PIGMENTED CURING COMPOUND.
4.) TOP OF SIDEWALK RAMP SHALL HAVE 12" WIDE BORDER WITH GROOVES $\frac{1}{4}$" DEEP, WITH $\frac{1}{8}$" RADIUS, AND SPACED AT $\frac{3}{4}$" OC.
5.) "X" SHALL HAVE A MAXIMUM SLOPE OF 1:12 (8.33%), AND A MINIMUM SLOPE OF 1:15 (6.67%).
6.) RAMP SURFACE SHALL BE SLIP-RESISTANT AND SHALL BE OF CONTRASTING FINISH FROM ADJACENT SIDEWALK (ROUGH BROOM FINISH OR EQUIVALENT).
7.) ALL ACCESS RAMPS SHALL BE CONSTRUCTED TO THE MOST CURRENT REQUIREMENT OF THE AMERICANS WITH DISABILITIES ACT (ADA) STANDARDS/CALIFORNIA CODE OF REGULATIONS TITLE 24-ACCESSIBILITY REGULATIONS. ADJUSTMENTS SHALL BE MADE IN THE FIELD TO ACHIEVE RAMP CONDITIONS.
8.) 4' LONG #4 SMOOTH ROUND BARS SHALL BE USED WHEN DRIVEWAY APPROACH IS NOT POURED MONOLITHICALLY.

NOT TO SCALE

CITY OF MORENO VALLEY — DECEMBER 3, 1984	RECOMMENDED: DIVISION MANAGER — DATE 7/16/19	CITY OF MORENO VALLEY PUBLIC WORKS DEPARTMENT - CAPITAL PROJECTS DIVISION
	APPROVED: PUBLIC WORKS DIRECTOR / CITY ENGINEER — DATE 10/11/19	**COMMERCIAL DRIVEWAY APPROACH: TYPE II**
		STANDARD PLAN **MVSI-112B-0** SHEET 2 OF 4